TWU 070 Surtees TS9 1971 South African GP John Surtees

For photo & decal references visit www.thiswayup.co.za

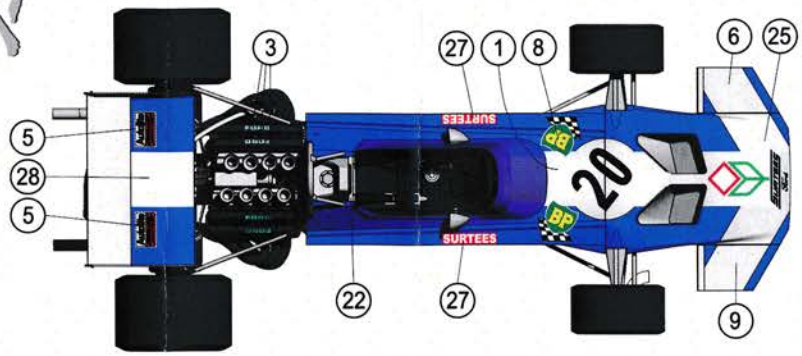

Paint

2P1178

TS15	blue
TS26	white
XF1	flat black
XF16	aluminium
XF19	sky grey
XF56	metallic grey
X11	silver
X10	gun metal
X18	semigloss black
X31	titanium gold

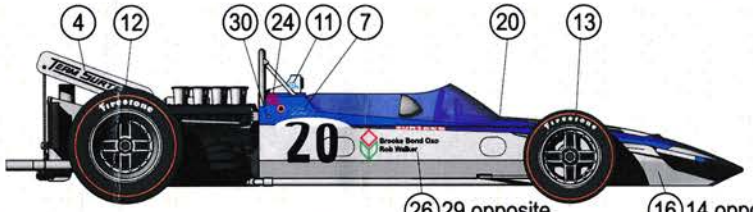

The Surtees TS9 made its race debut at the 1971 South African GP, driven by John Surtees himself. The car was similar to the TS7 in appearance but with various improvements. Most notable was the new colour scheme of the sponsors, Brooke Bond Oxo - Rob Walker. A Hewland FG400 gearbox was used and the suspension geometry changed to allow for the new, lower profile Firestone tyres. The front wheels now measured 13" in diameter and the rear wheels 15" in diameter. Other changes included a new nose cone, a taller windscreen, a new roll hoop layout, a new rear wing and also a new oil tank and radiator layout.
Surtees qualified in 6th place and was running in 2nd place when he had to retire because of a fractured oil pipe.

Produced by **This Way Up** Cape Town, South Africa 1/43rd Scale White Metal Kit Collectors model. Not suitable for small children

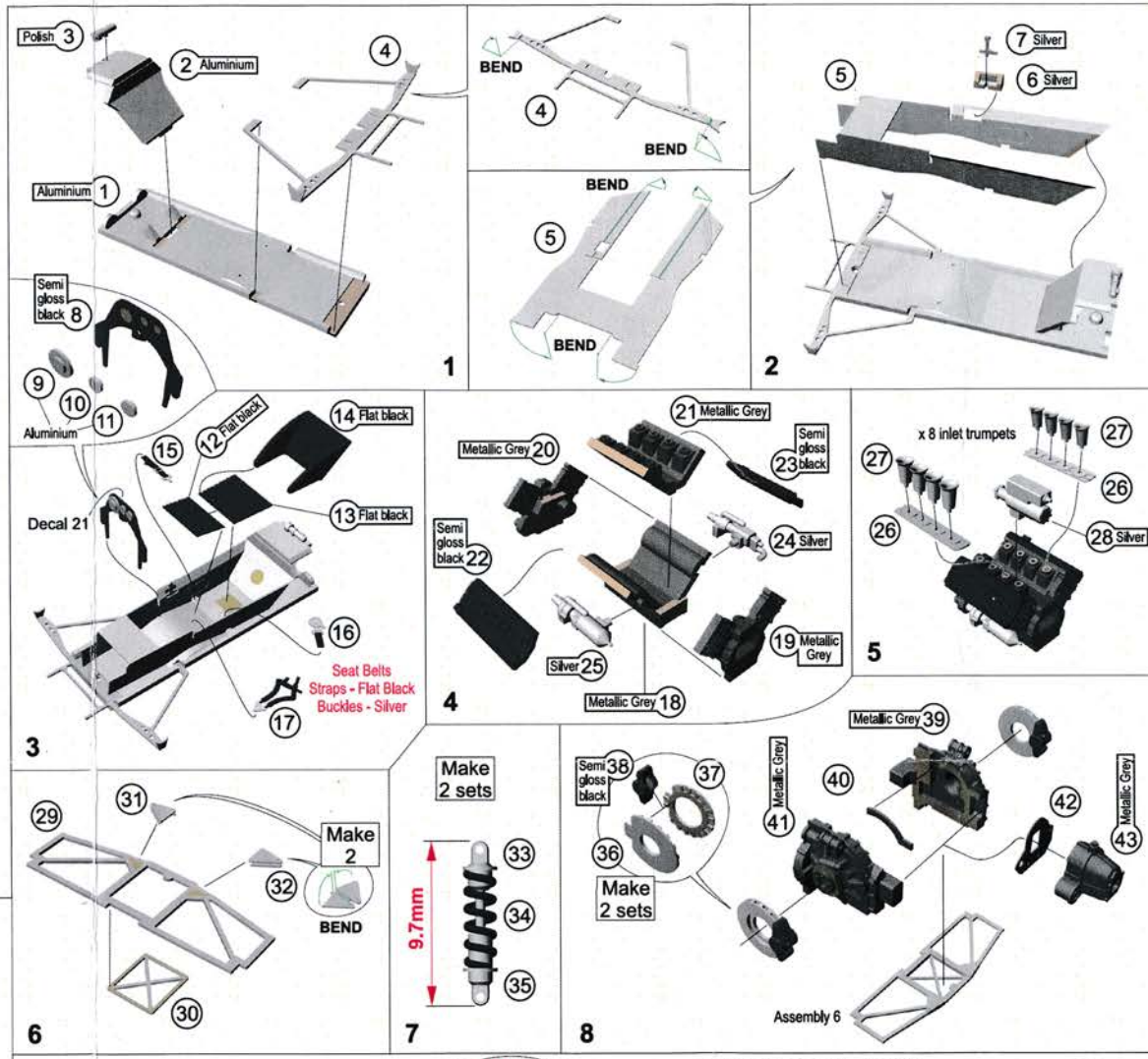

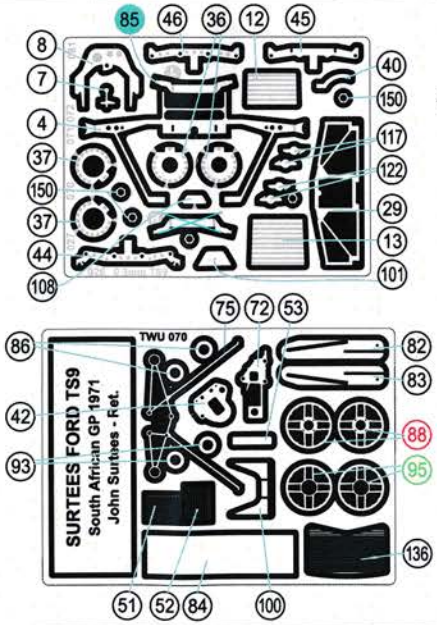

Photo Etch

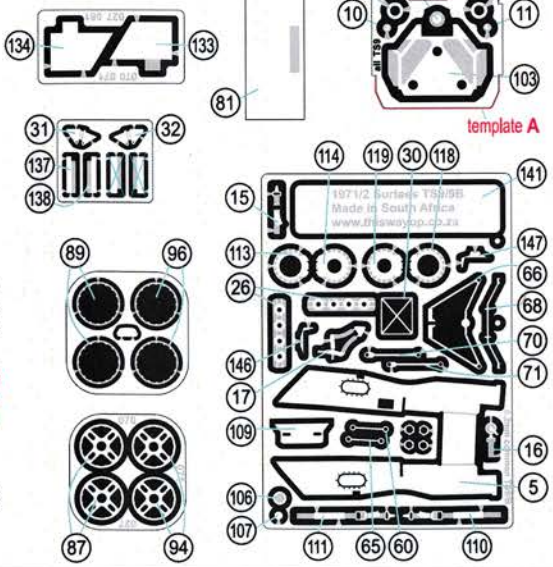

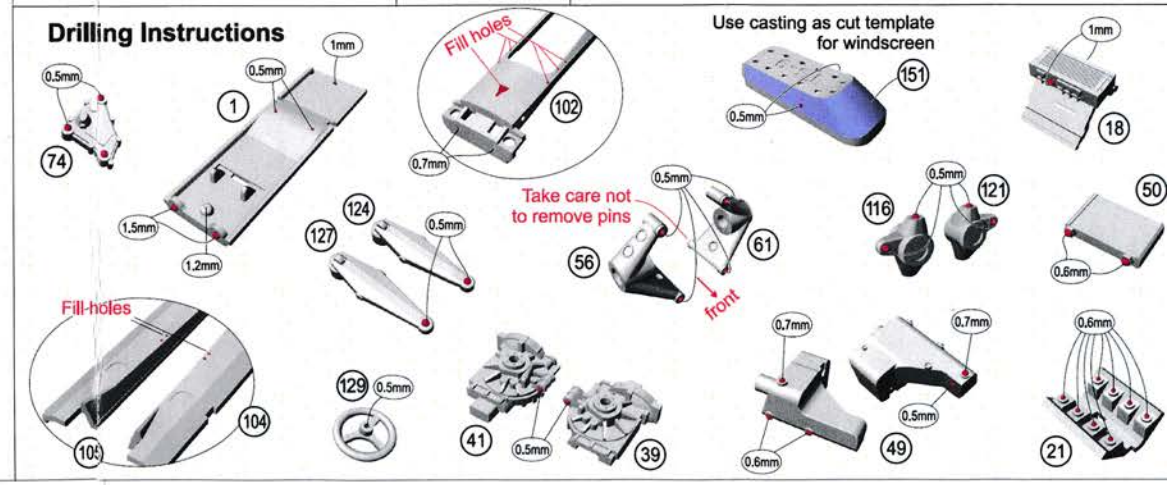

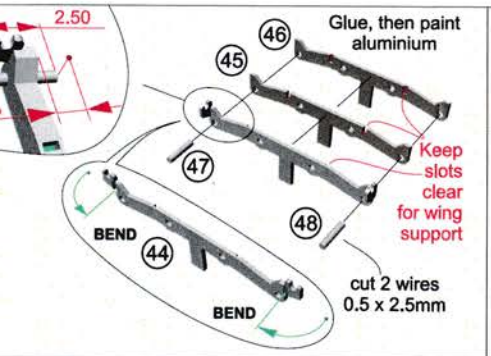
2.50
Glue, then paint aluminium
46
45
47
48
44
BEND
BEND
Keep slots clear for wing support
cut 2 wires 0.5 x 2.5mm

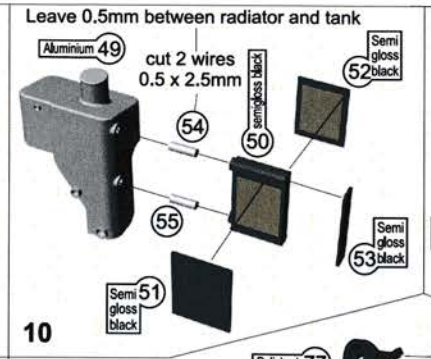
Leave 0.5mm between radiator and tank
Aluminium 49
cut 2 wires 0.5 x 2.5mm
semigloss black
50
52 Semi gloss black
54
55
Semi gloss black 51
53 Semi gloss black
10

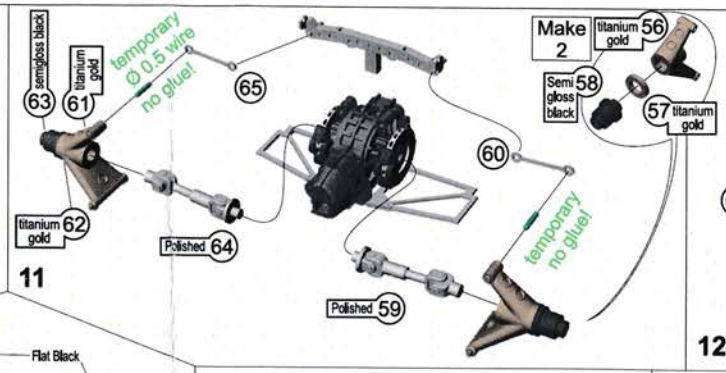
semigloss black 63
titanium gold 61
temporary Ø 0.5 wire no glue!
65
Make 2
titanium gold 56
Semi gloss black 58
57 titanium gold
60
temporary no glue!
titanium gold 62
Polished 64
Polished 59
11

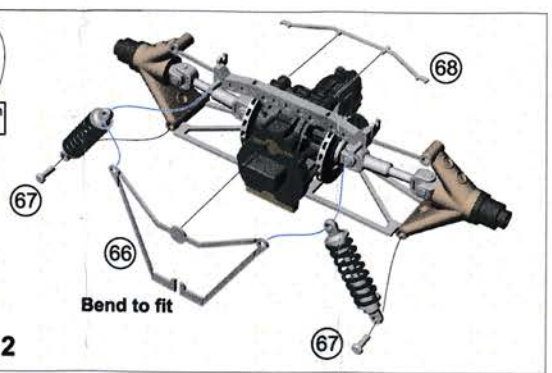
68
67
66
Bend to fit
67
12

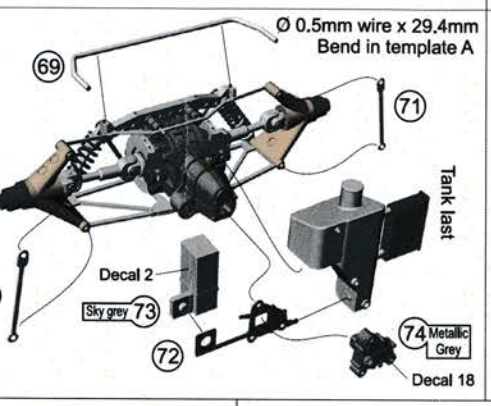
Ø 0.5mm wire x 29.4mm Bend in template A
69
71
Tank last
Decal 2
Sky grey 73
72
74 Metallic Grey
Decal 18

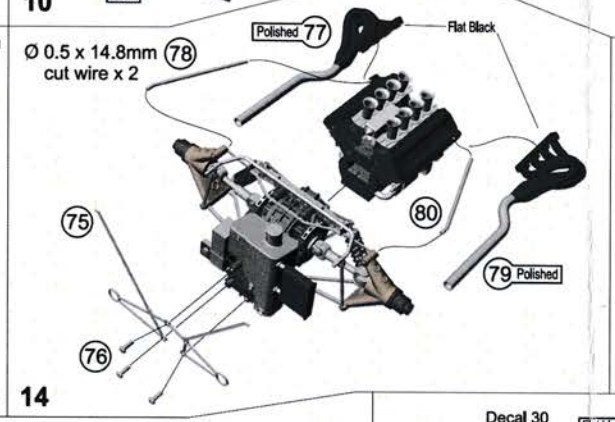
Polished 77
Flat Black
Ø 0.5 x 14.8mm cut wire x 2 78
75
80
79 Polished
76
14

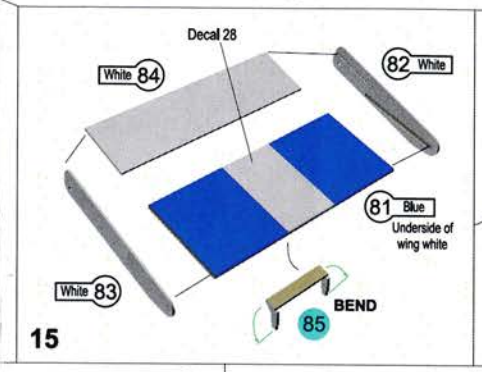
Decal 28
White 84
82 White
81 Blue
Underside of wing white
White 83
BEND
85
15

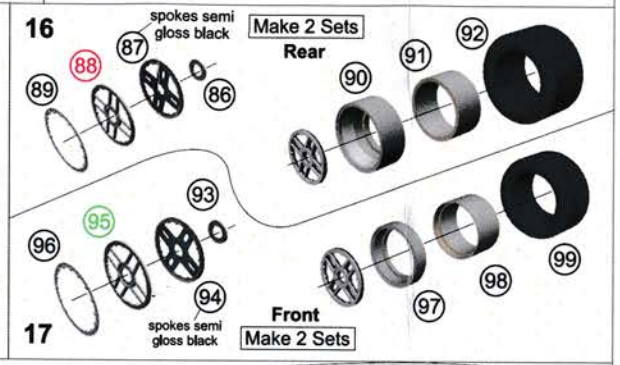
16
spokes semi gloss black
87
88
89
86
Make 2 Sets
Rear
90
91
92
93
95
96
94
spokes semi gloss black
Front
Make 2 Sets
97
98
99
17

100
BEND
half etch on underside
101
assemble & paint white

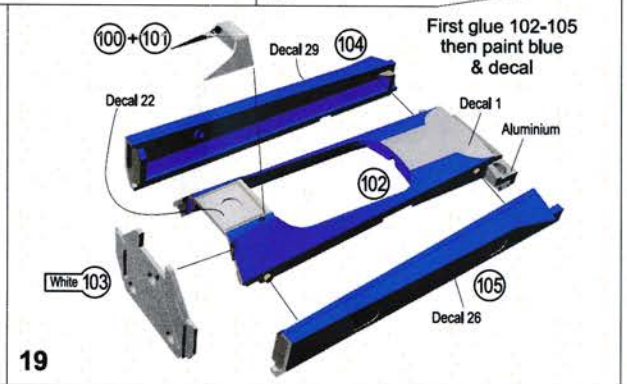
100+101
Decal 29
104
First glue 102-105 then paint blue & decal
Decal 22
Decal 1
Aluminium
102
White 103
105
Decal 26
19

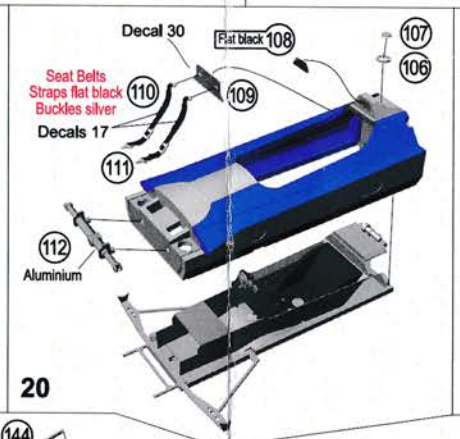
Decal 30
Flat black 108
107
106
Seat Belts Straps flat black Buckles silver
110
109
Decals 17
111
112
Aluminium
20

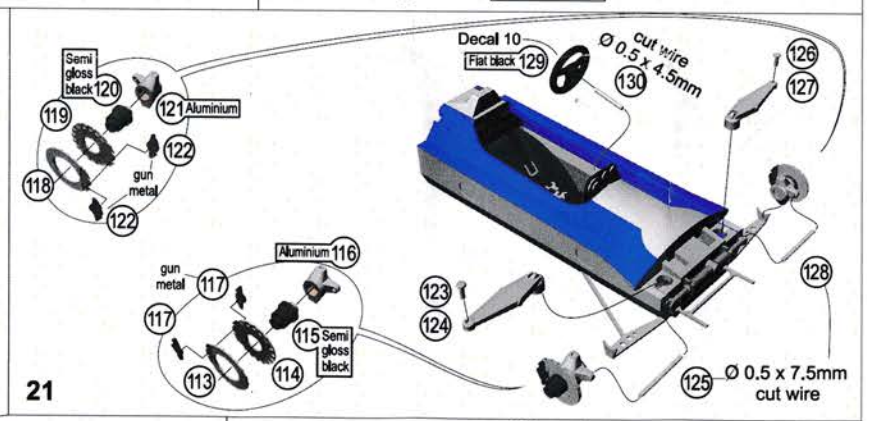
Semi gloss black 120
119
121 Aluminium
122
118
gun metal
122
Decal 10
Flat black 129
Ø 0.5 x 4.5mm cut wire
130
126
127
128
Aluminium 116
gun metal 117
117
113
114
115 Semi gloss black
123
124
125
Ø 0.5 x 7.5mm cut wire
21

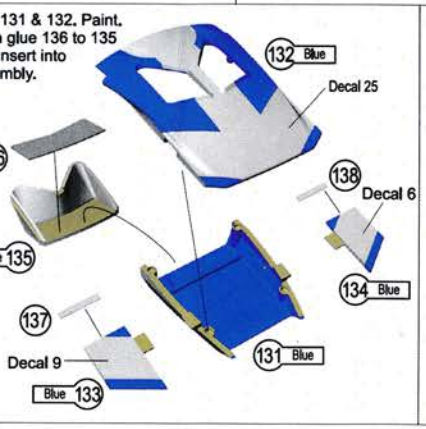
131 & 132. Paint.
glue 136 to 135
nsert into
mbly.
132 Blue
Decal 25
138
Decal 6
135
134 Blue
137
Decal 9
131 Blue
Blue 133

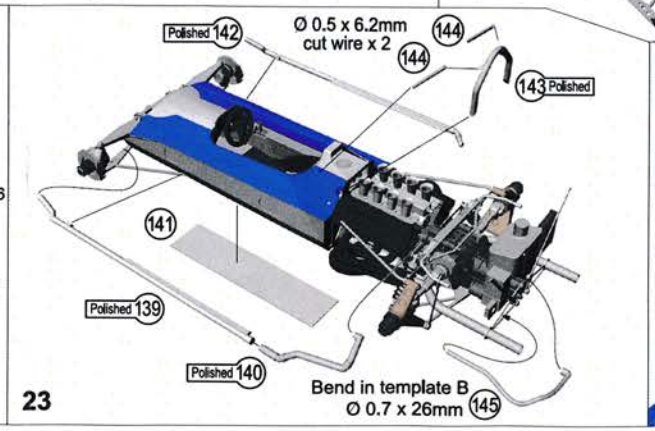
Polished 142
Ø 0.5 x 6.2mm cut wire x 2
144
144
143 Polished
141
Polished 139
Polished 140
Bend in template B Ø 0.7 x 26mm 145
23

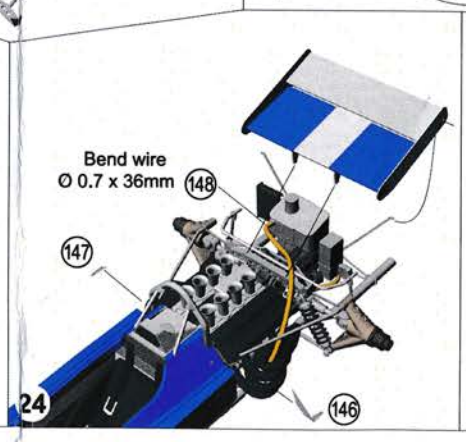
Bend wire Ø 0.7 x 36mm 148
147
146
24

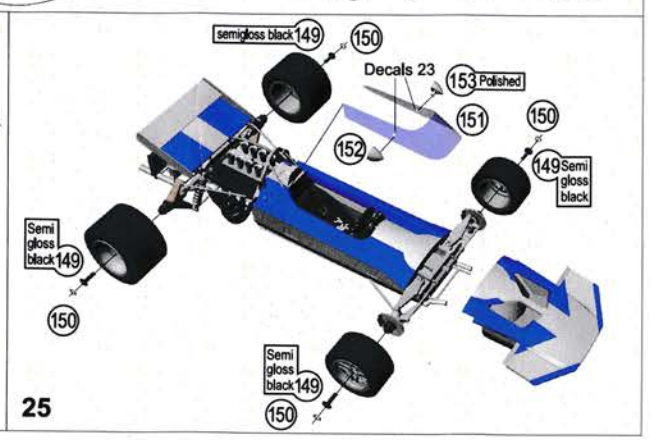
semigloss black 149
150
Decals 23
153 Polished
151
150
152
149 Semi gloss black
Semi gloss black 149
150
Semi gloss black 149
150
25